PART NUMBER	A (Overall Depth)	B (Useable Depth)	C (Top/Btm U Usable)
HWMR1912U	18.0" - 24.0"	15.1" - 21.1"	12.4" - 18.4"

NOTE: DEPTH IS FULLY ADJUSTABLE WITHIN RANGE

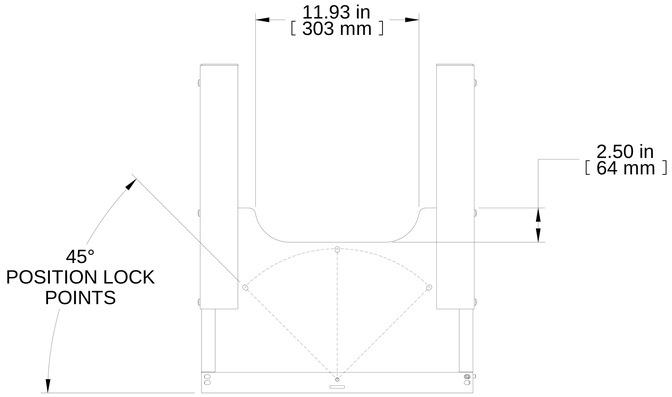

TOP VIEW

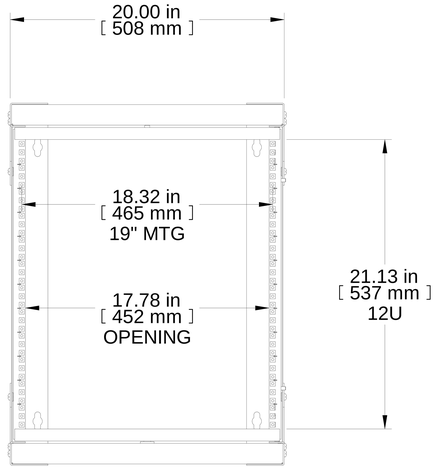

FRONT VIEW

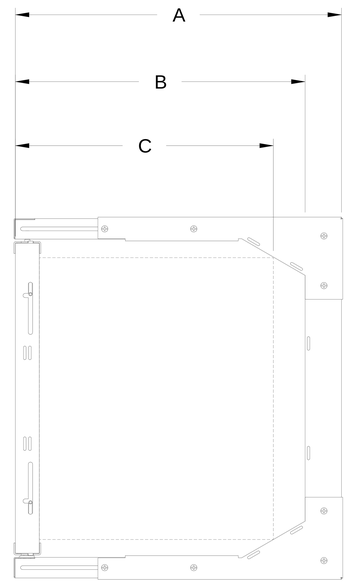

R.S. VIEW

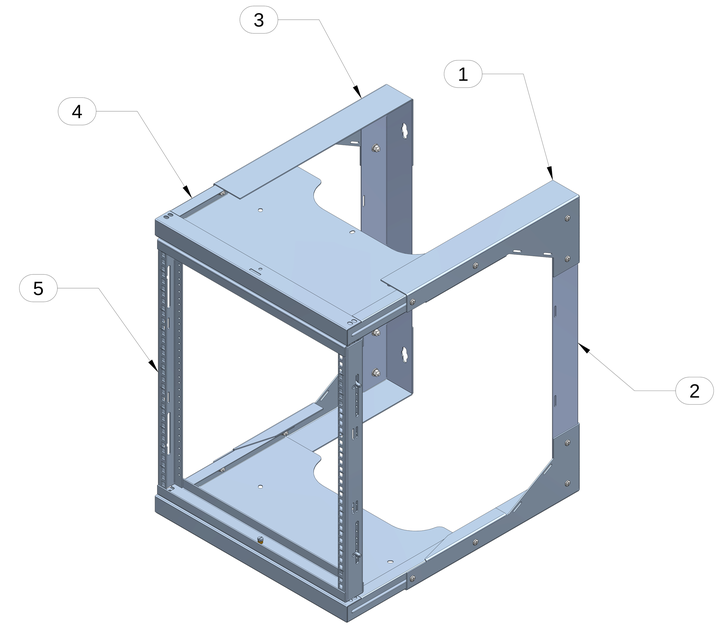

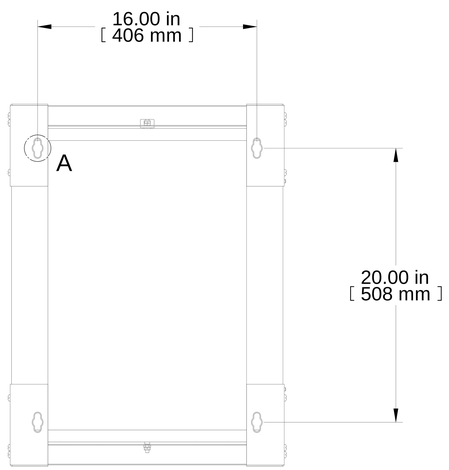

REAR VIEW
WALL MOUNT DIMENSIONS

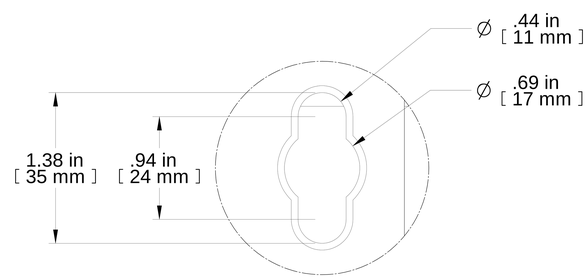

DETAIL A
MOUNTING HOLES
TYP 4 PLACES

Item Number	Title	Quantity
1	HWMR - MAIN SUPPORT BRKT RH	2
2	HWMR - VERT WALL BRKT	2
3	HWMR - MAIN SUPPORT BRKT LH	2
4	HWMR - TOP/BTM SUPPORT	2
5	HWMR - SWING FRAME ASSY	1

PART NUMBERS

HWMR1912UBK	PAINTED BLACK THIN FILM

NOTES

Adjustable Depth and Rotating Rack // Mounting Hardware NOT Incl.
Shipped Knock-down, Assembly Hardware Included
See Hammond Website for More Information

Français

Pour tous les détails sur nos produits,
svp veuillez consulter notre site www.hammondmfg.com

Data subject to change without notice. Isometric drawing not to scale.
Les données sont sujettes à changement sans préavis.

HAMMOND MANUFACTURING®
www.hammondmfg.com

RoHS

PART NO. **HWMR1912UBK**